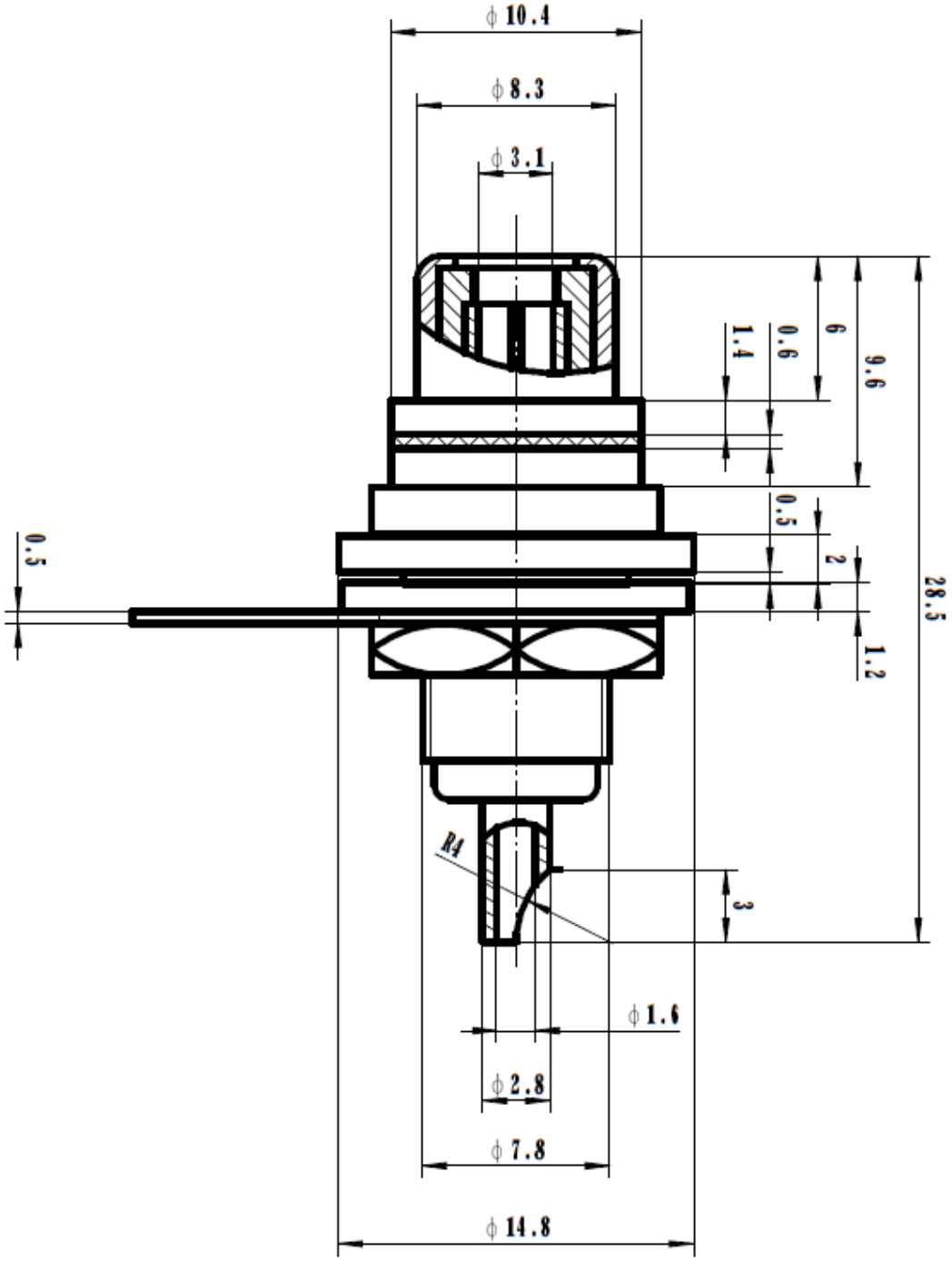
ϕ10.4
ϕ8.3
ϕ3.1
1.4
0.6
6
9.6
0.5
2
28.5
0.5
1.2
R4
3
ϕ1.6
ϕ2.8
ϕ7.8
ϕ14.8

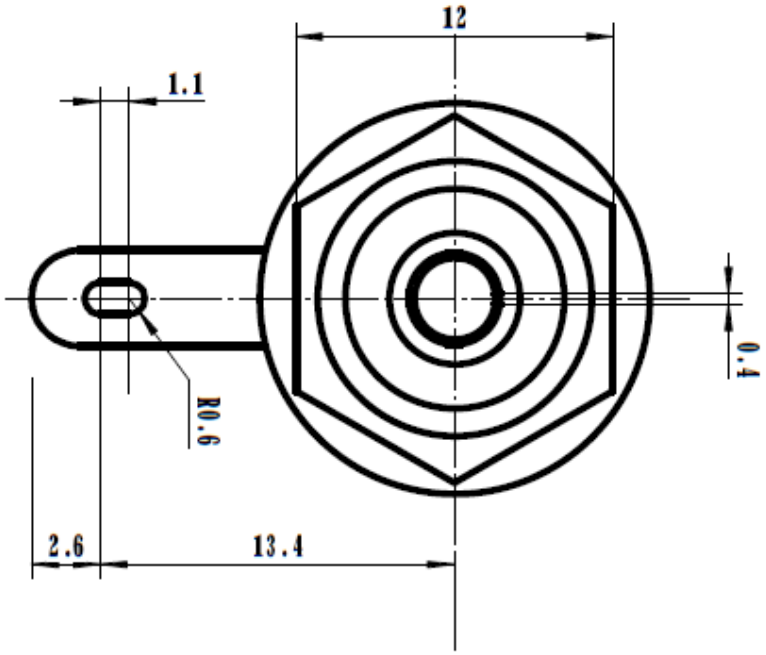
12
1.1
0.4
R0.6
2.6
13.4